Contents

2 / Company brief introduction

3 / Products show

4 / Type description

6 / Series products show-1

7 / Series products show-2

8 / Series products show-3

10 / Series products show-4

11 / Technical function index

13 / Outer dimension

15 / Type selection guide-1

16/ Type selection guide-2

18 / Fitting parts

20 / Typical application

Brief introduction for our company

Our company is Shenzhen Encom Electric Technologies Co., LTD. She is located in southeast of China, Guangdong province. Founded by a group of professional personnel who are dedicated in power electronics technologies researching、developing and industrializing in China and overseas all the year round. She has a team of high qualified administration clerks, a team of high level technologies developing personnel and a team of excellent market expanding talent. Our company is mainly engaged in developing , producing and selling of variable frequency speed regulation products in electric transmission and industrial automatization field.

At present, our company has developed EDS1000 multi-function sensorless vector control inverter, EDS2000 series high performance universal variable frequency speed regulator, EDS2800 series current vector control engineering inverter and EDS2860 series injection molding integrative machine by ourselves successfully. Our unique proprietary technology has been presented completely by above products and other products we intend to develop and all these products have their own knowledge property right. We think that our products can fulfill all kinds of demand from all of you.

Our company is located at science&technology park in Shenzhen, China and surrounded by lots of famous company of high and new technology. Our company now has production line of annual production value of US$6.25 million which gives us excellent industrialization condition. We will adhere to faith of honesty, cooperation, mutual benefit and service to make our future more beautiful with you!

Our faith:

Developer of E-time energy conversion and intelligent drive technology;
Pursuer for high-efficient, energy save, portable and ideal product;
Practicer of united, struggling, innovative and common-honorable team.

Series products show

1. EDS1000 series multi-function sensorless vector control inverter (0.4KW~55KW)
2. EDS2000 series high-performance universal inverter (2.2KW ~ 315KW)
3. EDS2800 series current vector control engineering inverter (11KW ~ 75KW)
4. EDS2860 series special type with integrated energy save and control for injection molding machine (7.5KW~75KW)
5. EDS3000 series vector magnetic field control inverter (in developing)

Particular performance characteristic:

1. Adopt control unit which takes DSP as core to realize hi-speed and hi-performance control to the system and to realize low-frequency hi-torque output.
2. Multiple I/O interface to fulfill special demand from every walk of life.
3. Reasonable design of digital potentiometer and 3 classes menu makes simple debugging available.
4. Standard RS485 and RS232 communication interface makes network control convenient.
5. Supports local and remote keypad and extended distance can reach 1000 meters.
6. Crystal English display keypad and English operation content indicating make operation more easy for the customer.

1. Type description

Inverter type						Rated power（KVA）	Rated output current（A）	Adapted motor（KW）
EDS1000-2S0004	——	——	——	——	——	1.1	3	0.4
EDS1000-2S0007	——	——	——	——	——	1.8	4.7	0.75
EDS1000-2S0015	——	——	——	——	——	2.8	7.5	1.5
EDS1000-2S0022	——	——	——	——	——	3.8	10	2.2
EDS1000-4T0007G/C	EDS1000-4T0007P/C	——	——	——	——	1.5	2.3	0.75
EDS1000-4T0015G/C	EDS1000-4T0015P/C	——	——	——	——	2.4	3.7	1.5
EDS1000-4T0022G/C	EDS1000-4T0022P/C	EDS2000-4T0022G/C	EDS2000-4T0022P/C	——	——	3.3	5.0	2.2
EDS1000-4T0037G/C	EDS1000-4T0037P/C	EDS2000-4T0037G/C	EDS2000-4T0037P/C	——	——	5.6	8.5	3.7
EDS1000-4T0055G/C	EDS1000-4T0055P/C	EDS2000-4T0055G/C	EDS2000-4T0055P/C	——	——	8.6	13	5.5
EDS1000-4T0075G/C	EDS1000-4T0075P/C	EDS2000-4T0075G/C	EDS2000-4T0075P/C	——	EDS2860-4T0075	11	17	7.5
EDS1000-4T0110G/B	EDS1000-4T0110P/C	EDS2000-4T0110G/B	EDS2000-4T0110P/C	EDS2800-4T0110	EDS2860-4T0110	17	25	11
EDS1000-4T0150G/B	EDS1000-4T0150P/B	EDS2000-4T0150G/B	EDS2000-4T0150P/B	EDS2800-4T0150	EDS2860-4T0150	21.7	33	15
EDS1000-4T0185G	EDS1000-4T0185P/B	EDS2000-4T0185G	EDS2000-4T0185P/B	EDS2800-4T0185	EDS2860-4T0185	25.7	39	18.5
EDS1000-4T0220G	EDS1000-4T0220P	EDS2000-4T0220G	EDS2000-4T0220P	EDS2800-4T0220	EDS2860-4T0220	29.6	45	22
EDS1000-4T0300G	EDS1000-4T0300P	EDS2000-4T0300G	EDS2000-4T0300P	EDS2800-4T0300	EDS2860-4T0300	39.5	60	30
EDS1000-4T0370G	EDS1000-4T0370P	EDS2000-4T0370G	EDS2000-4T0370P	EDS2800-4T0370	EDS2860-4T0370	49.4	75	37
EDS1000-4T0450G	EDS1000-4T0450P	EDS2000-4T0450G	EDS2000-4T0450P	EDS2800-4T0450	EDS2860-4T0450	60	91	45
EDS1000-4T0550G	EDS1000-4T0550P	EDS2000-4T0550G	EDS2000-4T0550P	EDS2800-4T0550	EDS2860-4T0550	73.7	112	55
——	EDS1000-4T0750P	EDS2000-4T0750G	EDS2000-4T0750P	EDS2800-4T0750	——	99	150	75
——	——	EDS2000-4T0900G	EDS2000-4T0900P	——	——	116	176	90
——	——	EDS2000-4T1100G	EDS2000-4T1100P	——	——	138	210	110
——	——	EDS2000-4T1320G	EDS2000-4T1320P	——	——	167	253	132
——	——	EDS2000-4T1600G	EDS2000-4T1600P	——	——	200	304	160
——	——	EDS2000-4T2000G	EDS2000-4T2000P	——	——	250	380	200
——	——	EDS2000-4T2200G	EDS2000-4T2200P	——	——	280	426	220
——	——	EDS2000-4T2500G	EDS2000-4T2500P	——	——	318	474	250
——	——	EDS2000-4T2800G	EDS2000-4T2800P	——	——	342	520	280
——	——	——	EDS2000-4T3150P	——	——	390	600	315

2. Type meaning

EDS2000 –4 T 0220G /B

name	code
Hi performance general type	EDS2000
Current vector engineering type	EDS2800
Injection molding integrative machine	EDS2860
Mini machine-fixable type	ECS600
Multi-function smart type	EDS1000

Volt. grade	code
220V	2
380V	4

input volt.	code
three phase	T
single phase	S

code	inverter type
G	Constant torque general type
P	Type for blower and water pump

code	adaptable motor power (KW)
0004	0.4
0007	0.75
0015	1.5
0022	2.2
0037	3.7
⋮	⋮
2500	250
2800	280
3150	315

code	fitting part
B	built-in brake unit
C	Built-in brake unit and brake resistance
D	with LCD
E	With remote control keypad

EDS1000 series multi-function sensorless vector control inverter

Merit of EDS1000 series:

1. Adopt space voltage vector PWM control and sensorless vector control.

2. 150% of rated torque at 1 Hz frequency.

3. Perfect function, small volume, suitable for all kinds of spot.

4. Bears automatic voltage regulation (AVR) and automatic current limiting function, which makes the system more stable.

5. Built-in PID controller, can realize constant pressure (flux etc.) “one drives multiple devices” control (function in option).

6. 16 (maximum) section speed control and weaving swing frequency function give you more handy operation.

7. 0-20KHz pulse input output interface are convenient for making up of digital closed-loop control system.

8. RS485 communication interface(part in option) can be built inside the inverter to realize centralized control and main auxiliary consecutive action control easily.

Induction for EDS2000 series hi-performance universal inverter

1. High quality hardware and software

★ Adopt control unit which takes DSP as core to realize hi-speed and hi-performance control to the system.

★ Unique software control arithmetic ensures ideal current wave form at low frequency to realize control demand of low frequency(1Hz) large output torque.

★ Great overload capacity ensures normal start-up demand of the device.

2. Convenient shortcut operation mode

★Intelligent parameter setting mode and operation panel parameter copy function can simplify your parameter setting.

★Crystal English display keypad can be optioned.

★Particular password protection function can let you set user password randomly to avoid set parameter being modified spitefully.

3. Perfect auxiliary control function

★ 10 digital input channel, 3 analog input channel, this series can accept 0~10V、0~5V or 4~20mA input signal.

★ 2 pulse input channel (maximum 50KHz), 2 OC digital output channel and 1 hi-speed pulse output channel are available.

★ Two 0~10V voltage or two 4~20mA current analog quantum output channel.

★ Output channel can be connected to standard secondary meter or use it to realize network connection and synchronous control for the inverter.

★ High carrier frequency (maximum 16KHz) can make real quiet running of the motor available.

4. Powerful control function

★ Can realize multiple section (maximum 16 sections) speed run control through interior simple PLC or control terminal.

★ Interior PI can realize hi-performance closed-loop control system.

★ Perfect weaving swing frequency function makes application of the weaving machine more simple and convenient.

★ You can set running time of the inverter randomly.

★ This series provides RS485 (or RS232) interface which makes network centralized control simple and convenient. Remote keypad can be as long as 1000 meters off the inverter.

Introduction for EDS2800 series current vector control engineering inverter(involves special function for injection molding machine)

1. Adopt current vector control and realize full load output at low frequency (0.1Hz).

2. Super great overload capacity—150% of rated current for 3 minutes, 200% of rated current for 5 seconds.

3. Perfect special control function for injection molding machine
   - ★ This series provides two 0~1A and two 0~10V inter-isolated analog input signal channel which makes buildup for all kinds of injection molding machine control circuit more convenient.
   - ★ Combine fine current vector control arithmetic with special demand from injection molding machine to the inverter which realizes fast control to torque current and fulfills high control demand from process such as high pressure molding closing、plastic injection etc. to the inverter.
   - ★ To suppress heating of injection molding machine motor efficiently through efficient control to exciting current.
   - ★ Can improve work efficiency of injection molding machine by innovative control method which solves the decreasing efficiency problem when power source control is converted to variable frequency control.

4. Bears all control function of EDS2000 series to fulfill requirements from all customers.

Injection molding machine variable frequency alteration principle diagram

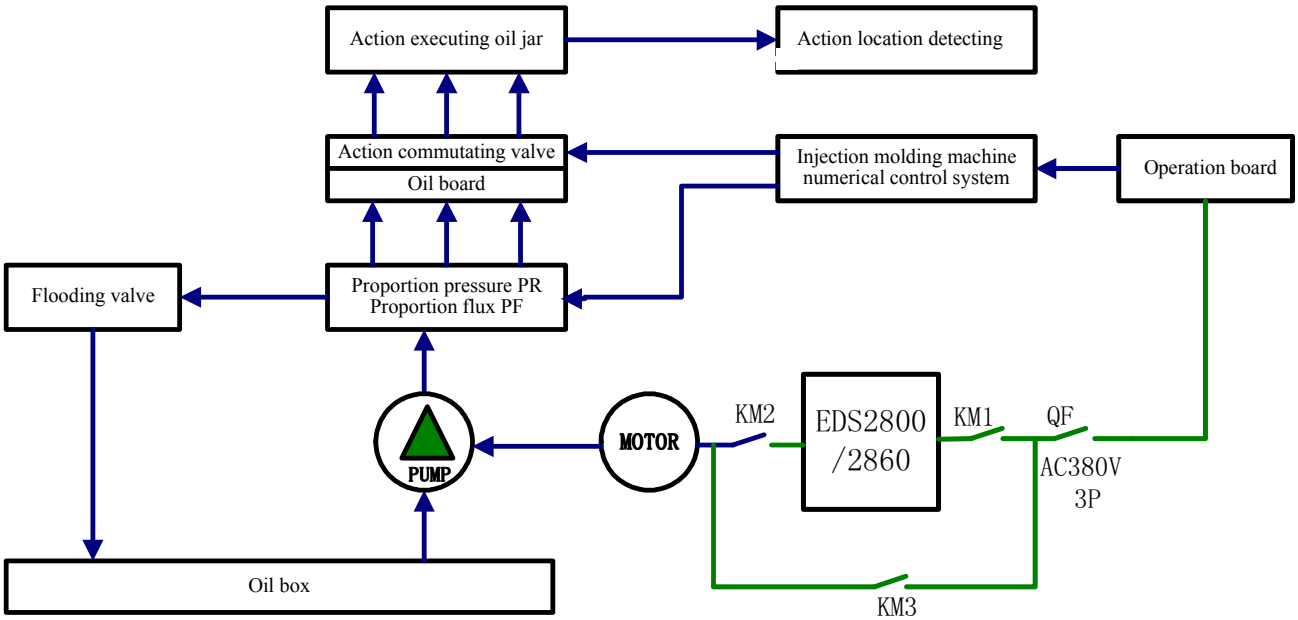

Curves before and after power save

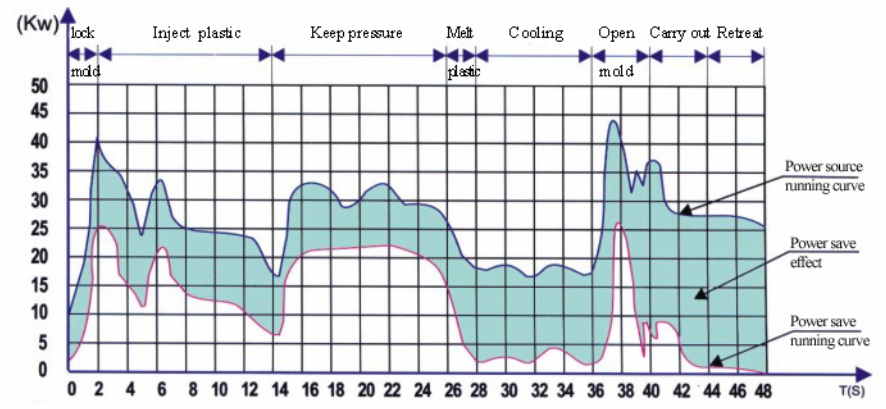

Shown as left figure, oil pump output power of the system with power save device is decreased in different degrees for different stages during one cycle compared with that of original system, especially in cooling stage the output power is almost 0. Shadow area shown in left figure is equal to saved power.

EDS2860 series injection molding integrative inverter

1. High power save rate

★ Adopt advanced digital signal processor (DSP) to make up of high efficient energy save variable pump by common injection molding machine ration pump and energy save cabinet;

★ Injection molding machine hydraulic pressure system matches power needed by unit running, therefore no high pressure flooding energy loss and power save rate reaches 25%~65%.

2. High reliability

★ Great overload capacity: 150% of rated current for 3 minutes, 200% of rated current for 5 seconds;

★ Keep original control mode and oil road of injection molding machine constant, ensure not to effect production process and ensure no jump-off and quality of products under plastic injecting and mold locking etc. high pressure heavy load impact during injection process;

★ Safe design of double loop for power source/power save running, bears automatic reset、power-off reset function to ensure production continuity and production efficiency.

3. Soft start-up

★ Reduce mold opening and locking vibration, prolong service lifetime of device and mould and improve work environment;

★ System heating is reduced obviously, temperature of the oil is stable and cooling water can be saved by above 30%;

★ Prolong service lifetime of sealed subassembly, reduce opportunity of shutdown for repair and save a lot of maintenance fare.

4. Simple operation

★ Double channels input, can accept pulse signal of 0~1A, 0~10V and 200Hz below.

★ Simple assembling and super strong defense, run synchronously with injection molding machine, no adjustment is needed.

★ Small volume, convenient assembling, humanized configuration design, compact configuration, handsome appearance.

★ Full-close separate air path design, dustproof, airproof, anticorrosive, great capacity of adapting ambient.

5. High return rate

★ All your investment can be returned for about 6-15 months by power save.

1. Technical index

item			Item description
Input	Rating volt.、frequency		3 phase 380V，50Hz/60Hz
	Allowed work volt. range		Voltage: 320V~460V
output	Voltage		0-380V
	Frequency		0Hz-400Hz
	Over loading capacity		G type: 150% of rated current for 1 minute，200% of rated current for 0.5s； P type: 3.7KW~132KW：120% of rated current for 1 minute；160KW above：110% of rated current for 1 minute，150% of rated current for 1s EDS2800 type: 150% of rated current for 3 minutes，200% of rated current for 5s
Control performance	Control mode		optimized space volt. vector PWM control mode for EDS2000; simple current vector control mode for EDS2800 series
	Speed regulation range		1：100
	Start-up torque		150% of rating torque at 3 Hz frequency for EDS2000 series; 130% of rated torque at 1Hz frequency for EDS2800 series
	Running speed stable state precision		≤±0.5% of rating synchronous speed
	Frequency precision		Digital setting：max. frequency×±0.01%；analog setting：Max. frequency×±0.2%
	Frequency resolution	analog setting	0.1% of max. frequency
		digital setting	0.01Hz
		exterior pulse	0.1% of max. frequency
		keypad digital setting	0.01Hz
Fitting parts			LCD keypad、brake subassembly、remote-control keypad、connecting cable for remote-control keypad etc.
Mounting mode			Wall hanging for type of 132kwG/160kWP and below, cabinet standing for type of 160kwG/200kwP and above, wall hanging for all EDS2800 types.

2. Function description

Run function	Run command specifying channel		Specified by keypad, or specified by control terminal, or specified by serial port
	Run frequency specifying channel		Digital specifying, analog specifying, pulse specifying, serial port specifying, combination specifying. You can switch at any time by multiple modes.
	Pulse output channel		0~50KHz pulse square wave output which can realize output of set frequency、output frequency etc.
	Analog output channel		2 channel of analog signal output, 4~20mA or 0~10V can be optioned for each, can realize output of set frequency、output frequency etc.
	Special channel for EDS2800		2 channel of 0~1A and 2 channel of 0~10V inter-isolated analog input signal
keypad	LED display		Can display 20 kinds of parameter such as set frequency, output frequency, output voltage, output current etc.
	LCD display		Part in option, operation content denoted in English
	Parameter copy		Use keypad and remote control keypad to realize fast copy for parameter
	Key-press locking		All key-press can be locked
Control performance	Torque boost		Automatic torque boost, manual torque boost within 0.1%~20.0%
	V/F curve (voltage frequency characteristic)		Set rating frequency randomly in range of 5~400Hz，can choose constant torque、degressive torque 1、degressive torque 2、degressive torque 3、custom V/F curve in total 5 kinds of curve
	Accelerating decelerating curve		3 modes：linear accelerating decelerating、 S curve accelerating decelerating and automatic accelerating decelerating mode; 4 kinds of accelerating decelerating time (unit minute/second can be optioned), Max. time 6000 minutes.
	brake	Power consumption brake	Interior or exterior brake resistance
		DC brake	Optional start-up and stop，action frequency 0~15Hz，action volt. 0~15%，action time 0~20.0 s
	jog		jog frequency range：0.50Hz~50.00Hz； jog accelerating decelerating time 0.1~60.0s can be set
	Multi-section speed running		Realized by interior PLC or control terminal
	Interior PID controller		Be convenient to make closed-loop system
	Automatic energy save running		Optimize V/F curve automatically based on the load to realize power save running
	Automatic volt. regulation (AVR)		Can keep constant output volt. When power source voltage varies.
	Automatic current limiting		Limit running current automatically to avoid frequent over-current which will cause trip
Protection function			Over-current protection、over-voltage protection、lack-voltage protection、over-heat protection、over-load protection、missing phase protection (in option) etc.

Outer dimension

1. Outline figure A

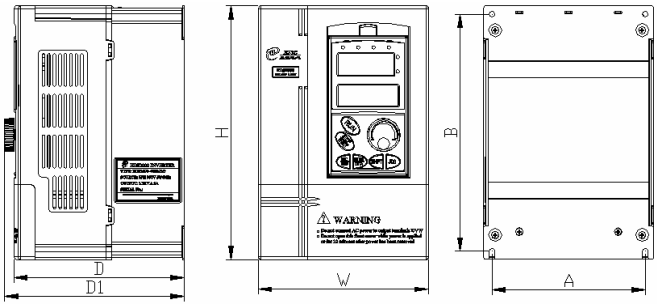

Adaptable type:

Inverter type （G：general；P：special）	A (mm)	B (mm)	W (mm)	H (mm)	D (mm)	D1 (mm)	Fixing aperture (mm)	Gross weight (kg)
EDS2000-4T0022G/4T0037P/C	140	215	155	230	155	164	5	3.0
EDS2000-4T0037G/4T0055P/C								
EDS2000-4T0055G/4T0075P/C	185	275	200	290	178	187	6	6.1
EDS2000-4T0075G/4T0110P/C								

2. Outline figure B

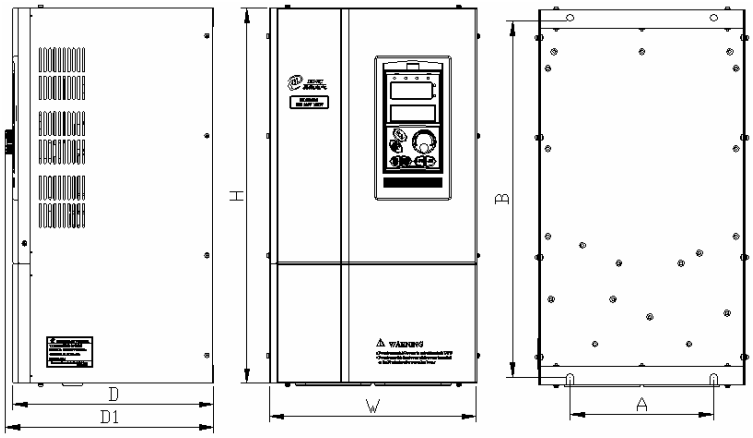

Adaptable type:

Inverter type		A (mm)	B (mm)	W (mm)	H (mm)	D (mm)	D1 (mm)	Fixing aperture (mm)	Gross weight (kg)
EDS2000-4T0110G/4T0150P/B	EDS2800-4T0110	140	350	230	370	212	223	7	14.5
EDS2000-4T0150G/4T0185P/B									
EDS2000-4T0185G/4T0220P	EDS2800-4T0150	180	440	260	460	252	261	9	19.0
	EDS2800-4T0185								
EDS2000-4T0220G/4T0300P	EDS2800-4T0220								
EDS2000-4T0300G/4T0370P	EDS2800-4T0300	200	515	300	535	252	261	9	25.0
EDS2000-4T0370G/4T0450P	EDS2800-4T0370								
EDS2000-4T0450G/4T0550P	EDS2800-4T0450	250	620	370	645	258	267	12	45.0
EDS2000-4T0550G/4T0750P	EDS2800-4T0550								
EDS2000-4T0750G/4T0900P	——	300	650	480	680	360	369	12	65
EDS2000-4T0900G/4T1100P	——								

EDS2000-4T1100G/4T1320P	——	400	720	480	750	372	381	12	75
EDS2000-4T1320G/4T1600P	——								

3. Outline figure C

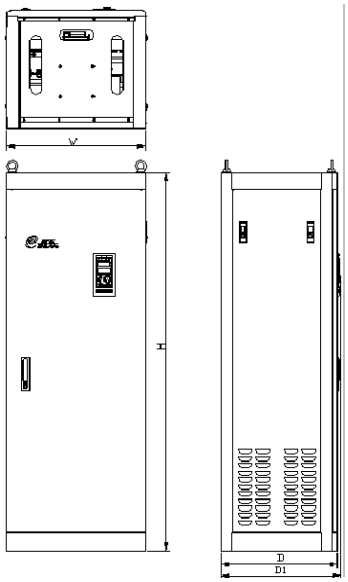

Adaptable type:

Inverter type		W (mm)	H (mm)	D (mm)	D1 (mm)
EDS2000-4T1600G	EDS2000-4T2000P	600	1500	500	509
EDS2000-4T2000G	EDS2000-4T2200P		1600		
EDS2000-4T2200G	EDS2000-4T2500P				
EDS2000-4T2500G	EDS2000-4T2800P	700	1600	500	509
EDS2000-4T2800G	EDS2000-4T3150P				

4. Outline figure D

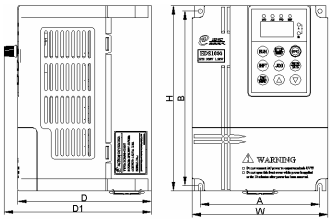

Adaptable type

Inverter type (G: constant torque load; P: blower and water pump load)		A (mm)	B (mm)	W (mm)	H (mm)	D (mm)	D1 (mm)	Fixing aperture (mm)	Gross weight (kg)
EDS1000-2S0004	EDS1000-4T0007G/C	110	160	125	170	123.2	135.5	4	1.5
EDS1000-2S0007	EDS1000-4T0015G/C								
EDS1000-2S0015	EDS1000-4T0022P/C								
EDS1000-2S0022		140	215	155	230	155	164	5	3.0
EDS1000-4T0022G/4T0037P/C									
EDS1000-4T0037G/4T0055P/C									
EDS1000-4T0055G/4T0075P/C		185	275	200	290	178	187	6	6.1
EDS1000-4T0075G/4T0110P/C									

Type selection guide 1

Basic wiring diagram

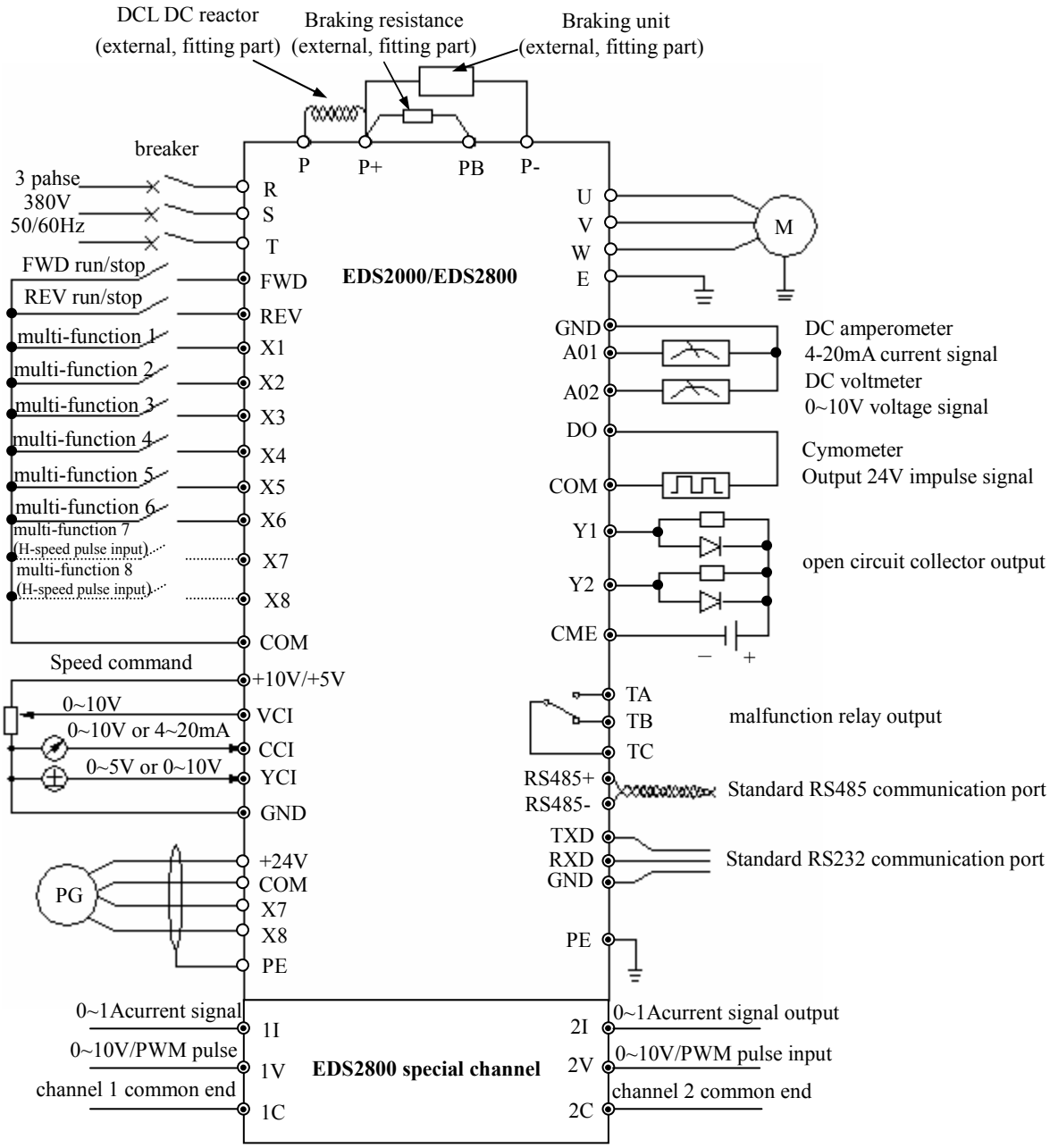

Remark: The main loop fitting parts terminals are not the same as above Figure according to different types, please refer to <<User manual>>.

Explanation for CPU board terminals

1. Control loop terminal CN6 arranged as follows：

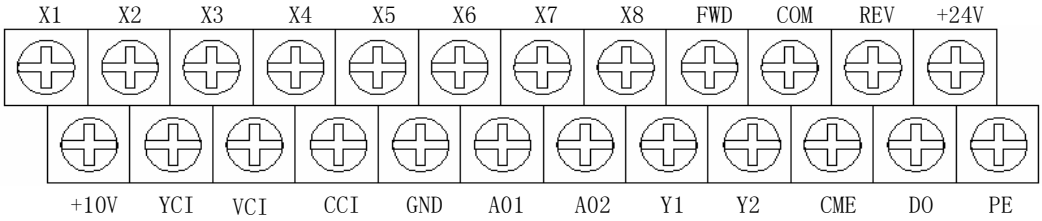

2. CN6 terminal function description is as follows.

item	symbol	name	Function description	Spec
run command	FWD	Forward run command	Forward reverse run command, see F5.08 group double-wire and three-wire control function description	Optocoupler isolation input Input impedance: R=2KΩ Max. input frequency: 200Hz
	REV	Reverse run command		
Multi-function input terminal	X1	Multi-function input 1	Used for multi-function input terminal, for detailed see Chapter 6 Section 6.6 terminal function parameter(F5 group)input end function description. X7、X8 can be set as H-speed impulse input port, for detailed see Chapter 6 Section 6.6 terminal function parameter(F5 group)input end function description. (common end: COM)	X1~X8 FWD、REV COM Close effect Input impedance of X7、X8 input channel: R=2KΩ Max. output Freq.: 50KHz Input voltage range: 15~24V
	X2	Multi-function input 2		
	X3	Multi-function input 3		
	X4	Multi-function input 4		
	X5	Multi-function input 5		
	X6	Multi-function input 6		
	X7	Multi-function input 7		
	X8	Multi-function input 8		
Power supply	+24V	+24V power supply	Provide +24V power supply. (negative pole COM)	Max. output current:150mA
	+10V/+5V	+10V/+5V power supply	Provide +10V/+5V power supply. (negative pole GND)	Max. output current:50mA
	COM	Common end+24V power supply negative pole	Common end and reference ground of digital signal input	Internal one another isolating among CME、COM and GND
	GND	+10V power supply negative pole	Reference ground of analog signal and +10V power supply	
	CME	Y1、Y2output common end	Common end of multi-function output terminal Y1、Y2	
Analog value input	CCI	Analog value input CCI	Accept analog voltage/current input，voltage、current optioned by jumping-wire JP2，factory default is voltage. (reference ground：GND)	Input voltage range：0~10V (input impedance：70K) Input current range：4~20mA (input impedance：500) Resolution：1/1000
	YCI	Analog value input YCI	Accept analog voltage input (reference ground：GND)	Input voltage range：0~5V(input impedance 70K)、0~10V(input impedance 36K)

	VCI	Analog value input VCI	Accept analog voltage input (reference ground：GND)	Input voltage range：0~10V (input impedance：70K) resolution：1/1000
Analog value output	AO1	Analog value output1	Provide analog voltage/current output，can express 6 kinds of parameter see F5.17 parameter description , output voltage/current optioned by JP4 , factory default output voltage. (reference ground：GND)	Current output range ：4~20mA voltage output range ：0~10V
	AO2	Analog value output 2	Provide analog voltage/current output , can express 6 kinds of parameter，output voltage/current optioned by JP5 , factory default output current. (reference ground：GND)	
Multi-function output terminal	Y1	Open circuit collector output terminal 1	Used for multi-function switch output terminal, for detailed see Chapter 6 Section 6.6 terminal function parameter (F5 group) output end function description. (common end: CME)	optocoupler isolation output Work voltage range: 15~30V Max. output current:50mA Use method see F5.10~F5.11 description of parameter
	Y2	Open circuit collector output terminal 2		
	DO	H-sped impulse output terminal	Used for multi-function impulse signal output terminal, for detailed see Chapter 6 Section 6.6 terminal function parameter(F5 group) output end function description. (common end: CME)	Output impulse voltage: 24V Output frequency range: depending on parameter F5.23, max.50KHz
shield	PE	Shield grounding	Used for terminal connecting wire shield layer grounding, analog signal wire、485 shield layer of 485 communication wire can be connected to his terminal	Connect with mail loop connecting wire terminal E interiorly

Remark: This description is just for EDS2000/2800/2860 series.

Fitting parts

1. Long distance keypad:

   Type: EN-KB3(without crystal display)

   EN-KB4(with crystal display)

The distance between inverter and EN-KB3 or EN-KB4 can reach 1000 meters maximumly.

This series of inverters support local keypad and long distance keypad synchronously, no priority, you can operate the inverter through both of them at the same time.

2. Assembly dimension for external keypad:

   Hole dimension of EDS1000(1.5KW below) external keypad:

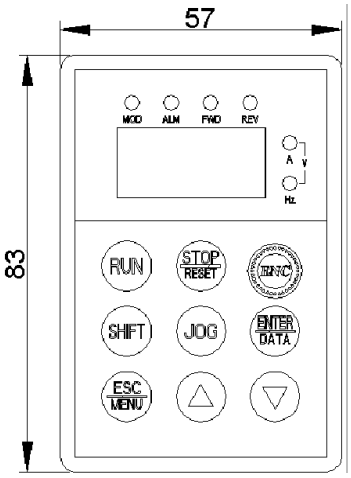

Hole dimension for EDS2000(includes 1.5KW above type of EDS1000 series) external keypad:

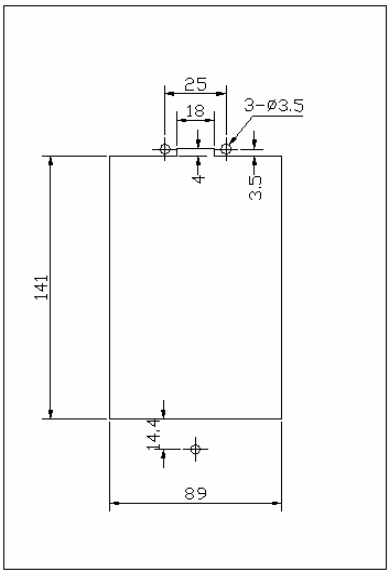

3. Assembly dimension for constant pressure water supply controller:

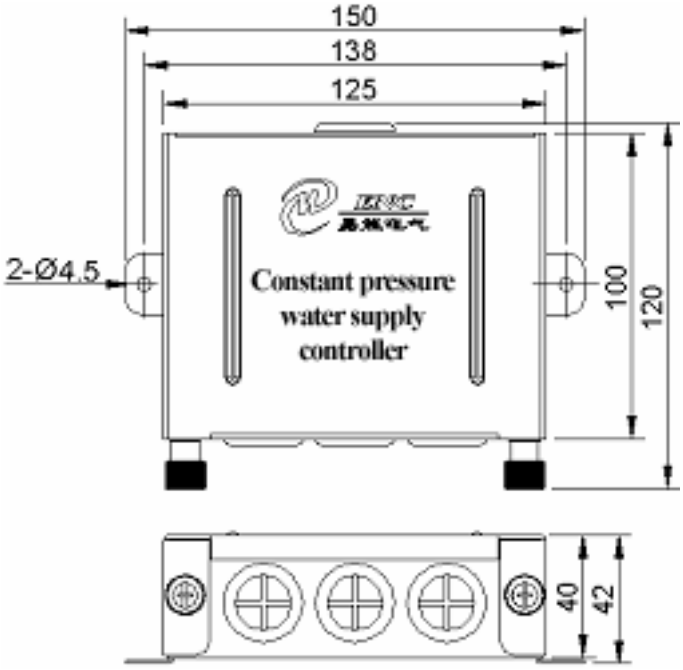

Typical application introduction

1. Part of application industry of Encom inverters

Papermaking machine
Printing machine
Knitting machine
Dyeing machine
Roving machine/fine yarn machine
Glove machinery
Injection machine
Extrusion machine
Membrane-blowing machine
Wave crest soldering machine
Abstersion machine
Food machine
Packing machine
Dope painting production line
Automatized production line
Medicine chemical industry

Brewing industry
Tobacco trade
Oil field industry
Central air conditioner energy save alteration
Concrete enterprise energy save alteration
Boiler automatization energy save alteration

2. Example:

A. Constant tension control system

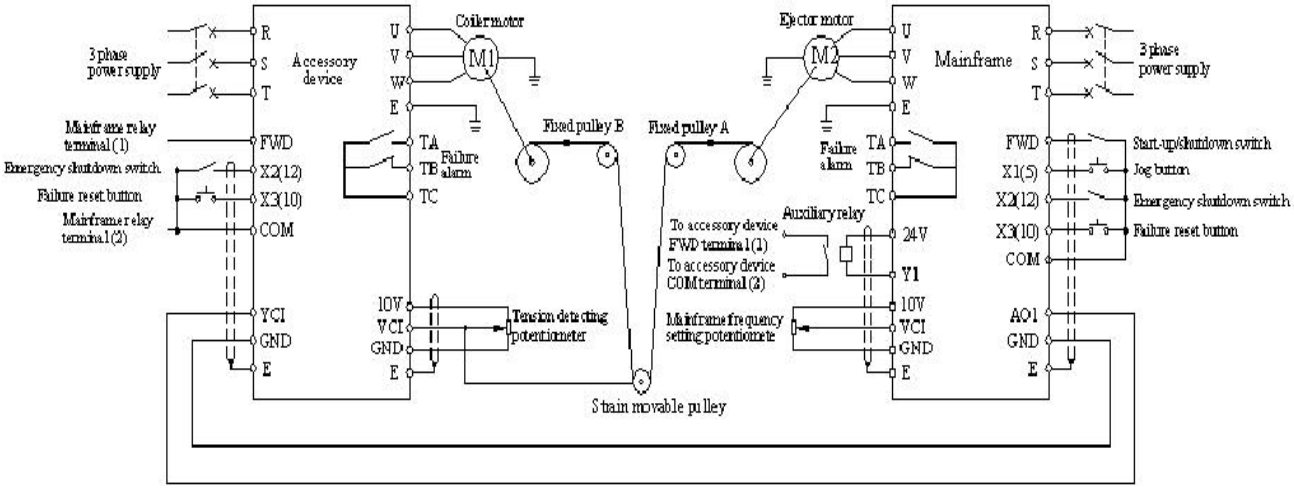

Realized function:

a. Consecutive action for main and auxiliary machine, synchronous start-up and shutdown;
b. Automatic constant tension control;
c. Running speed is controlled by mainframe.

Applied to:
Drawbench
Wire and cable automatic coiler
Membrane-blowing machine etc.

B. Variable frequency "one drives four" constant pressure control system

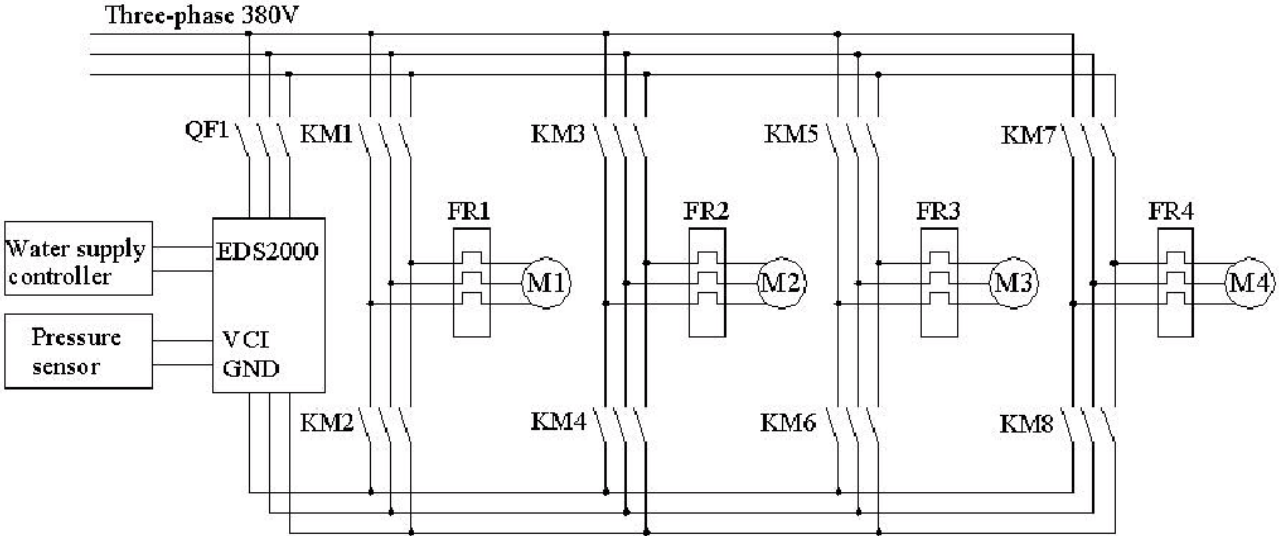

System merit:

1. Automatic constant pressure (constant flux etc.), high precision;
2. Little investment and fast repayment, normally the system can save energy for above 20%;
3. Convenient adjustment, stable and reliable system.

Applied to:
Water supply for the building
Central air conditioner alteration
Air-pressing machine alteration、boiler alteration etc.